Zhejiang University

Department of Physics

General Physics (H) Problem Set #5

1. Three objects of uniform density—a solid sphere, a solid cylinder, and a hollow cylinder—are placed at the top of an incline (Fig. Q11.12). If they all are released from rest at the same elevation and roll without slipping, which object reaches the bottom first? Which reaches it last? You should try this at home and note that the result is independent of the masses and the radii of the objects.

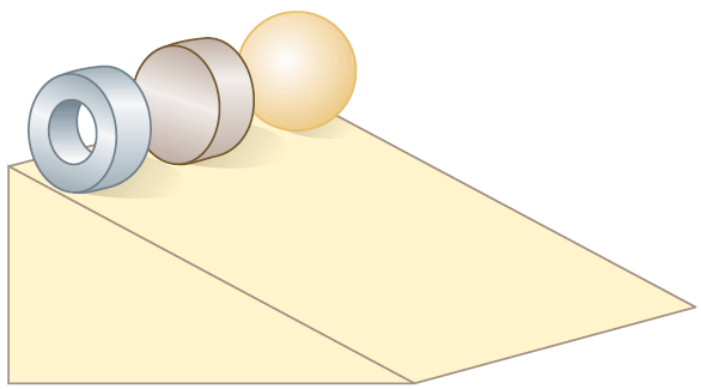

Figure Q11.12 Which object wins the race?

2. A projectile of mass m moves to the right with speed v_i (Fig. P11.54a). The projectile strikes and sticks to the end of a stationary rod of mass M and length d that is

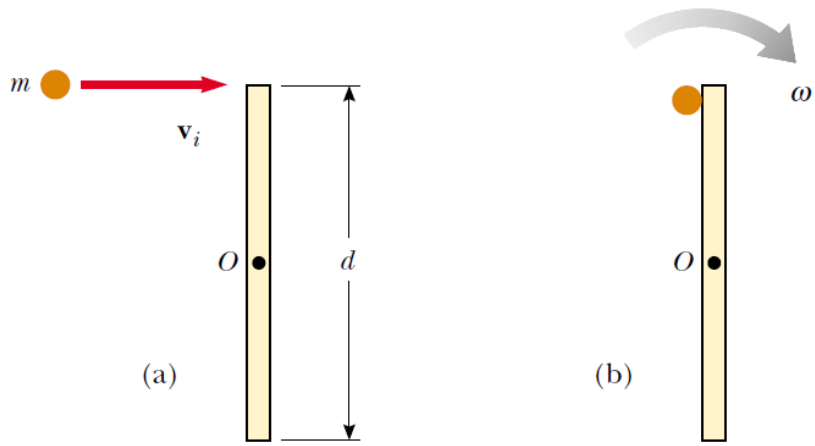

Figure P11.54

pivoted about a frictionless axle through its center (Fig. P11.54b). (a) Find the angular speed of the system right after the collision. (b) Determine the fractional loss in mechanical energy due to the collision.

3. Find the mass m needed to balance the 1 500-kg truck on the incline shown in Figure P10.32. Assume all pulleys are frictionless and massless.

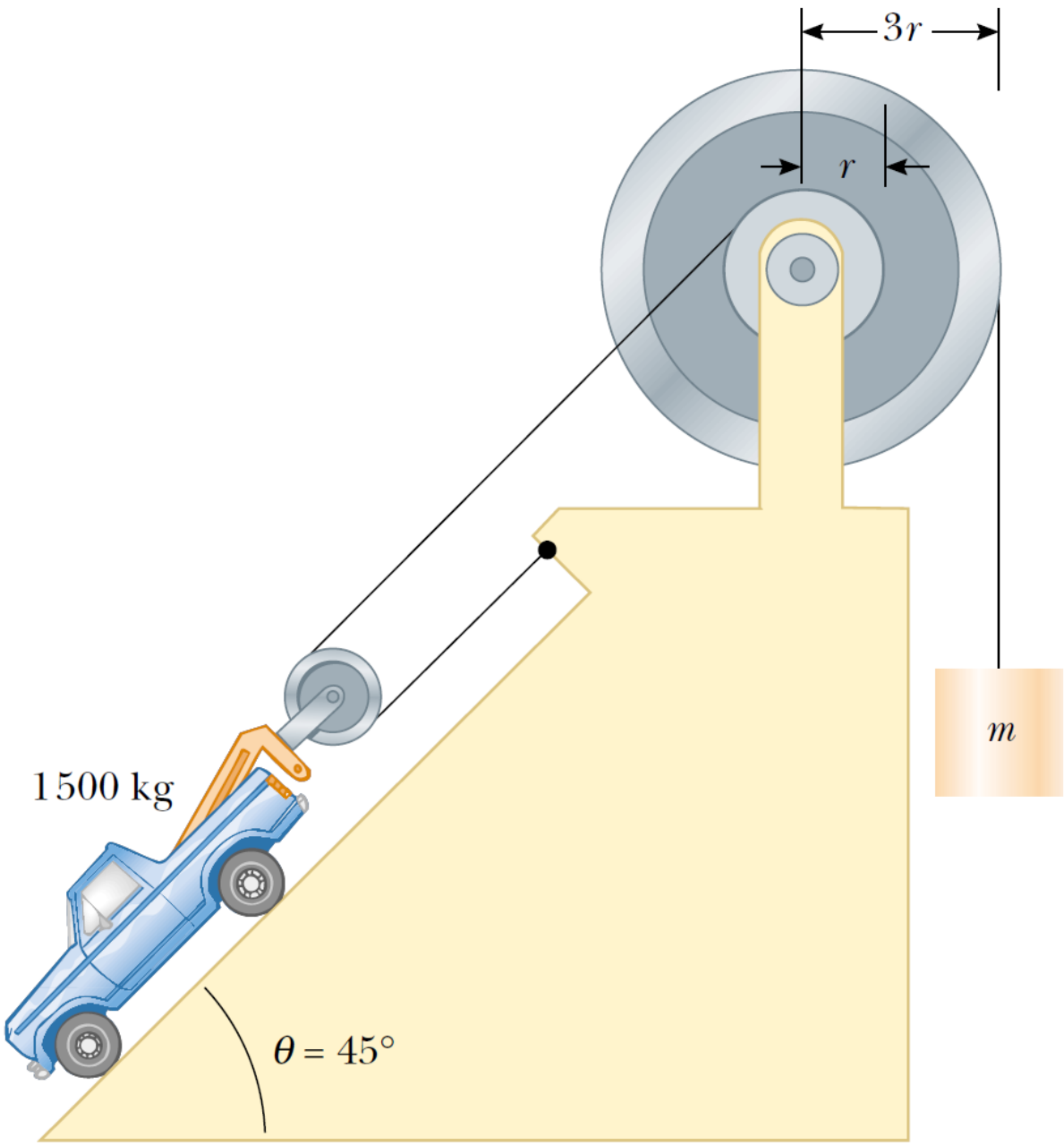

Figure P10.32

4. A 60.0-kg woman stands at the rim of a horizontal turntable having a moment of inertia of 500 kg· m^2 and a radius of 2.00 m. The turntable is initially at rest and is free to rotate about a frictionless, vertical axle through its center. The woman then starts walking around the rim clockwise (as viewed from above the system) at a constant speed of 1.50 m/s relative to the Earth. (a) In what direction and with what angular speed does the turntable rotate? (b) How much work does the woman do to set herself and the turntable into motion?

5. Two identical, uniform bricks of length L are placed in a stack over the edge of a horizontal surface such that the maximum possible overhang without falling is achieved, as shown in Figure P12.22. Find the distance x.

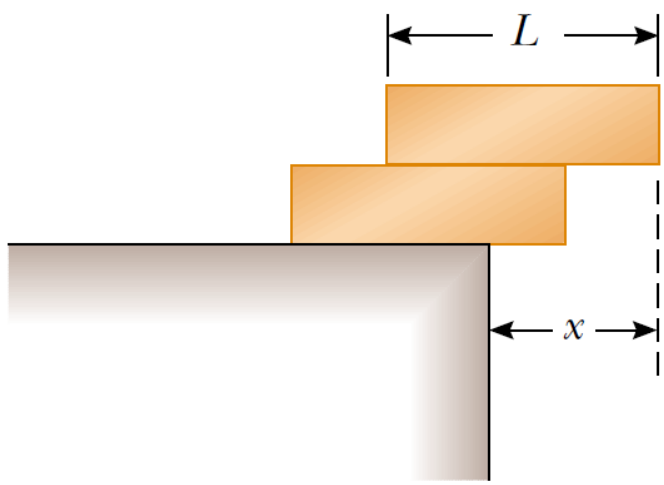

Figure P12.22

6. A 1 200-N uniform boom is supported by a cable, as illustrated in Figure P12.44. The boom is pivoted at the bottom, and a 2 000-N object hangs from its top. Find the tension in the cable and the components of the reaction force exerted on the boom by the floor.

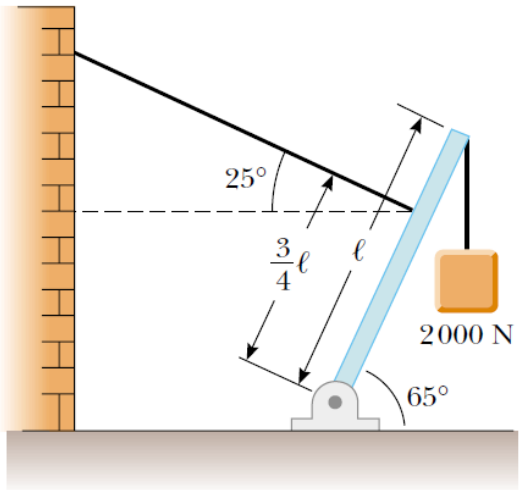

Figure P12.44

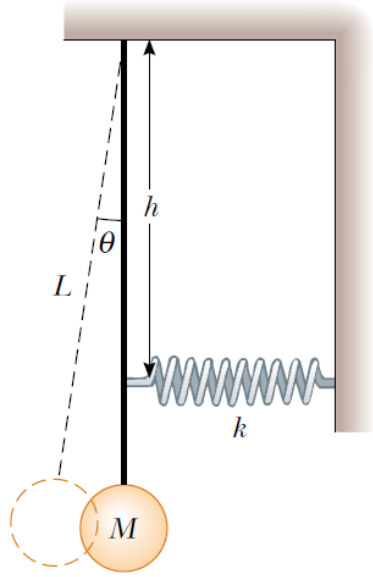

Figure P13.59

7. A pendulum of length L and mass M has a spring of force constant k connected to it at a distance h below its point of suspension (Fig. P13.59). Find the frequency of vibration of the system for small values of the amplitude (small θ). (Assume that the vertical suspension of length L is rigid, but neglect its mass.)

8. Rotation of a sliding rigid rod

Consider a rod with mass m and length L standing straight on the friction-less ground. When we release the rod, it will fall from the unstable equilibrium position:

(a) Calculate the angular velocity of the rod, when it has an angle of θ with respect to the ground as illustrated in Figure 1.

(b) What is the final angular velocity ω_1 of the rod before it hits the ground?

(c) If the same rod is leaning to a frictionless wall with an initial angle of α to the frictionless ground (see Figure 2), what is the final angular velocity ω_2 of the rod before it hits the ground? Note that there is a possibility that the right end of the rod leaves from the wall before the rod hits the ground.

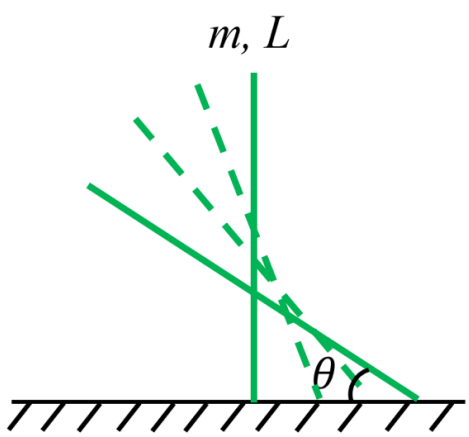

Figure 1

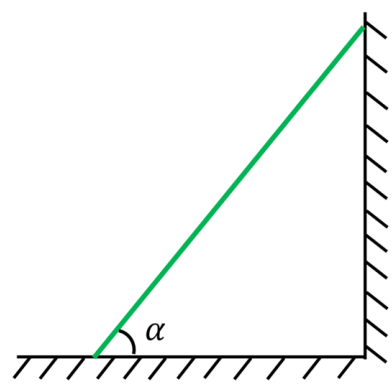

Figure 2